DECKBLATT ZUM ORIGINAL-DOKUMENT DES HERSTELLERS

# 1500W | ANLEITUNG GERÄTE

**HERSTELLER** Delta Elektronika BV
**PRODUKTSERIE** SM1500-Serie

**Ihr direkter Ansprechpartner für Delta-Produkte!**

Die Ing. Erhard Fischer GmbH ist Ihr zuverlässiger Partner für die Produkte von Delta Elektronika. Wir bieten Ihnen nicht nur hochwertigen technischen Support, sondern auch kompetente Beratung und maßgeschneiderte Lösungen für Ihre individuellen Anforderungen.

Ob Standardprodukt, kundenspezifische Geräte oder Schaltschrankbau. Wir freuen uns, Sie bei Ihrer Lösungsfindung mit eingehender Kundenberatung kompetent unterstützen zu können.

Kontaktieren Sie uns für technische Beratung oder ein individuelles Angebot!

Wir freuen uns auf das Gespräch mit Ihnen.

IHR ANSPRECHPARTNER
**Martin Sochor**

+43 2236 42694-40
powersupply@ing-fischer.at
**Ing. Erhard Fischer GmbH**
Weissenbach 101 | AT-2371 Hinterbrühl
www.ing-fischer.at

Vissersdijk 4, 4301 ND
Zierikzee, the Netherlands
www.DeltaPowerSupplies.com
Tel. +31 111 413656

# SM1500-series

- **SM 15-100**
- **SM 35-45**
- **SM 52-30**
- **SM 52-AR-60**
- **SM 70-22**
- **SM 120-13**
- **SM 300-5**
- **SM 400-AR-8**

**Product Manuals and Driver & Example Software**
For several Applications, build-in Options and Interfaces there are Application Notes, separate Product Manuals and Driver & Example Software available on our website. See **PRODUCTS\SM1500\DOWNLOADS**.

## PRODUCT MANUAL

Contents:

1 – **Safety Instructions**
2 – **Sicherheitshinweise**
3 – **Consignes de Sécurité**
4 – **General**
5 – **Installation**
6 – **Trouble Shooting**
7 – **Maintenance & Calibration**
8 – **EU Declaration of Conformity**

# 1 SAFETY INSTRUCTIONS – SM1500-series

## 1.1 Caution

The following safety precautions must be observed during all phases of operation, service and repair of this equipment. Failure to comply with the safety precautions or warnings in this document violates safety standards of design, manufacture and intended use of this equipment and may impair the built-in protections. Delta Elektronika shall not be liable for user's failure to comply with these requirements.

## 1.2 Installation Category

The Delta Elektronika power supplies have been evaluated to installation category II (Over voltage category II).

## 1.3 Grounding of Mains Terminals (AC Power Terminals)

This product is a safety Class 1 unit. To minimize shock hazard, the unit must be connected to the AC Power Supply mains through a three-conductor power cable for a single phase unit, with the ground wire firmly connected to an electrical ground (safety ground) at the power outlet.

For units designed to be hard-wired to the mains supply, the protective earth terminal must be connected to the safety electrical ground before another connection is made. Any interruption of the protective ground conductor, or disconnection of the protective earth terminal will cause a potential shock hazard that might cause personal injury.

## 1.4 Grounding of DC Power Terminals

If the DC power terminal of a unit is specified to sink or source to a maximum of 60VDC, and either the 'minus' or 'plus' DC power terminal is grounded, the voltage on the following connections can be considered safe:

- DC power terminals and sense connections.
- programming/monitor/status-signals, Interlock, Master/Slave connections, ACF/DCF-relay.
- all Delta Elektronika interfaces.

**Warning!** When the 'plus' DC power terminal can exceed 60VDC in respect to the 'minus' DC power terminal, additional external measures must be taken to ensure safety isolation of the DC power terminals and sense connections.

**Warning!** When the 'minus' DC power terminal of the unit can exceed 60VDC / 42.4Vpk in respect to ground, additional external measures must be taken to ensure safety insulation of the following:

- DC power terminals and sense connections.
- programming/monitor/status-signals, Interlock, Master/Slave connections, ACF/DCF-relay.
- interfaces with functional insulation, non-insulated interfaces.

**Caution 1:** If a low voltage unit has both DC power terminals floating, or if the DC terminals are in series with an external high AC or DC voltage, the 'minus' DC power terminal can exceed the safe value in respect to ground as specified in the above warning!

**Caution 2:** Although a high voltage unit is set to a safe voltage below 60VDC, for safety it must always be considered as a high voltage unit! Wrong operation, a programming error or an external defect can result in an unsafe high DC output voltage.

**Caution 3:** when programming a high voltage unit directly via a PC or a network connection, either ground the 'minus' DC power terminal or use a safety insulated interface!

For more information regards Grounding & Safety, see online application note *"Safe operation of a power supply"*.

## 1.5 Danger of electrical shock

Touching the contacts of the mains plug or wires directly after disconnecting from the mains, can cause an electrical shock. And there can still be a dangerous voltage between one of the DC power terminals and the PE because of charged X-capacitors. This can also happen when the DC power output is switched off, but the unit is still switched on! Therefore, never touch PE and one of the DC power terminals at the same time.

## 1.6 Connection to mains supply

Either connect to the mains supply permanently or via an industrial type of plug, complying with IEC 60309.

"Permanently connected equipment" or "Pluggable equipment type B".

## 1.7 Fuses

Fuses to be changed by authorized Delta Elektronika service personnel only, for continued protection against risk of fire.

## 1.8 AC Input Ratings

Do not use an AC Supply which exceeds the AC input voltage and frequency rating of this unit. The AC input voltage and frequency rating of the Delta Elektronika power supply series are stated in the accompanying datasheet.

## 1.9 Live Circuits

Operating personnel should not remove the unit covers. No internal adjustment or component replacement is allowed by non-Delta Elektronika qualified personnel. Never replace components with the power cable connected. To avoid injuries, always disconnect power, remove external voltage sources and discharge circuits before touching components.

## 1.10 Parts Substitutions & Modifications

Parts substitutions and modifications are allowed by authorized Delta Elektronika service personnel only. For repairs the unit must be returned to a Delta Elektronika service facility.

### 1.11 Removal of (safety) covers

Safety cover(s) are used to cover potentially hazardous voltages.
Observe the following when removing safety cover(s):

- Switch off the unit and disconnect the unit from the AC mains supply and from the DC power application.
- Wait for 5 minutes to allow internal capacitors to discharge, then unscrew and remove the cover(s).
- Always place the cover(s) back before connecting the unit to the mains supply again.

### 1.12 Handling and mounting

**Warning!** Unit weight is 10kg! Take care when unpacking or moving unit: lift with 2 persons or use a lift tool.

- Risk of crushing or clamping of limbs!
- Risk of cutting: unit has sharp edges and corners!

**Warning!** No wall mounting or ceiling mounting allowed! Risk of crushing under unit.
Only mount unit horizontally, place on a stable surface or use rack mounting.

### 1.13 Rotating fan, thermal burn

Proper air flow is required for cooling of the unit. This enables operation at full power and a longer lifetime.
If the unit gets over heated, the power will shut down until unit has cooled down again.

**Warning!** Top cover and fan exhausts can get hot. Avoid touching these while operating the unit at high power!
**Warning!** Do not block fan openings, or air exhausts. Do not try to enter fan openings by any object to obstruct fan. Long hair can get stuck in fan, wear a hairnet if you have long hair.

**Warning!** Do not (dis)connect cables to the DC power terminals while the unit is on. Sudden making or breaking of high DC currents can cause large sparks, even at low voltages. Risk of thermal burn and fire!

### 1.14 Electro medical devices

**Warning!** High currents can run through the DC power terminals. These currents cause strong magnetic fields. Do not come near if you have an electro medical device such as a pacemaker.

### 1.15 Environmental Conditions

- The Delta Elektronika power supplies safety approval applies to the following operating conditions:
- Usage : Indoor use only.
  **Warning!** Not intended to be used in the presence of children or animals!
- Ambient temperature : -20 to 50 °C.
- Maximum relative humidity : 95%, noncondensing, up to 40 °C, 75%, noncondensing, up to 50 °C.
- Altitude : Do not use above 2000 m sea level.
  **Warning!** Electrical Creepage & Clearance not valid for higher altitudes!
- Pollution degree : 2

### 1.16 Symbols & markings

*Caution risk of electrical Shock.*

*Instruction manual symbol. The instrument will be marked with this symbol when it is necessary for the user to refer to the instruction manual.*

*Protective ground conductor terminal.*

o *Off (supply).*

I *On (supply).*

### 1.17 Canada

This product has been tested to the requirements of CAN/CSA-C22.2 No. 61010.1, second edition, including Amendment 1, or a later version of the same standard incorporating the same level of testing requirements.

### 1.18 cTUVus

## WEEE (Waste Electrical & Electronic Equipment)

### 1.19 Correct Disposal of this Product

Applicable in the European Union.

This marking shown on the product, its packing or its literature indicates that it should not be disposed with other wastes at the end of its working life but should be collected separately to recycle it responsibly to promote the sustainable reuse of material resources.

# 2 SICHERHEITSHINWEISE – SM1500-series

## 2.1 Vorsicht

Die folgenden Sicherheitsvorkehrungen müssen in allen Betriebs-, Service- und Reparaturphasen dieses Geräts befolgt werden. Die Nichteinhaltung der Sicherheitsvorkehrungen oder Warnungen in diesem Dokument verstößt gegen die Sicherheitsstandards im Hinblick auf Bauart, Produktion und vorgesehene Nutzung dieses Geräts und kann die eingebauten Schutzvorrichtungen beschädigen. Delta Elektronika haftet nicht dafür, wenn der Nutzer diesen Anforderungen nicht nachkommt.

## 2.2 Installationskategorie

Die Delta Elektronika Stromversorgungen wurden der Installationskategorie II (Überspannungskategorie II) zugeordnet.

## 2.3 Erdung der Netzanschlussklemmen (AC-Einspeiseklemmen)

Dieses Produkt ist ein Gerät der Sicherheitsklasse 1. Um die Gefahr eines elektrischen Schlags zu minimieren, muss das Gerät mit einem Dreileiter-Stromkabel mit dem AC-Stromversorgungsnetz verbunden werden. Hierbei muss der Schutzleiter fest mit einem elektrischen Erdungsanschluss (Schutzleiter) an der Stromquelle verbunden sein. Bei Geräten, die fest mit dem Versorgungsnetz verdrahtet werden, muss die Schutzerdungsklemme mit dem Sicherheitserdungsanschluss verbunden werden, bevor eine andere Verbindung hergestellt wird. Eine Unterbrechung des Schutzleiters oder eine Trennung der Schutzerdungsklemme kann zu einem elektrischen Schlag führen, der zur Verletzung von Personen führen kann.

## 2.4 Erdung der DC-Anschlussklemmen

Wenn die DC-Anschlussklemme eines Geräts dafür ausgelegt ist, maximal 60 VDC zu empfangen oder zu beziehen und entweder die 'minus' oder 'plus' DC-Anschlussklemme geerdet ist, kann die Spannung als sicher angesehen werden für:
- DC-Anschlussklemmen und Sense-Anschlüsse.
- Programmierung-/Monitor-/Status-Signale, InterLock, Master/Slave Anschlüsse, ACF/DCF-Relais.
- Alle Delta Elektronika Schnittstellen.

**Warnung!** Wenn die 'plus' DC-Anschlussklemme im Verhältnis zur 'minus' DC-Anschlussklemme 60 VDC überschreiten kann, müssen zusätzliche externe Maßnahmen ergriffen werden, um die Sicherheitsisolation der DC-Anschlussklemmen und Sense-Verbindungen sicherzustellen.

**Warnung!** Wenn die 'minus' DC-Anschlussklemme im Verhältnis zur Erdung 60 VDC/42,4 Vpk überschreiten kann, müssen zusätzliche externe Maßnahmen ergriffen werden, um die Sicherheitsisolation sicherzustellen für:

- DC-Anschlussklemmen und Sense-Anschlüsse.
- Programmierung/Monitor/Status-Signale, InterLock, Master/Slave Anschlüsse, ACF/DCF-Relais.
- Schnittstellen mit Funktionale Isolation, Schnittstellen ohne Sicherheitsisolation.

**Vorsicht 1:** Falls beide DC-Anschlussklemmen eines Niederspannungsgerätes potentialfrei sind oder falls die DC-Klemmen in Reihe mit einer externen AC- oder DC-Hochspannung geschaltet sind, kann die 'minus' DC-Anschlussklemme den sicheren Wert in Bezug auf die Erdung wie in der Warnung oben spezifiziert überschreiten.

**Vorsicht 2:** Obwohl ein Hochspannungsgerät mit einer sicheren Spannung unter 60 VDC betrieben wird, muss es zur Sicherheit immer als Hochspannungsgerät angesehen werden! Falsche Bedienung, ein Programmierfehler oder ein externer Fehler können zu einer unsicheren, hohen DC-Ausgangsspannung führen.

**Vorsicht 3:** Wenn ein Hochspannungsgerät direkt über ein PC oder Netzwerk Verbindung programmiert wird, muss oder die 'minus' DC-Anschlussklemme mit PE verbunden wurden, oder muss ein Schnittstelle mit Sicherheitsisolation gebraucht wurden! Für weitere Informationen und Schaltpläne hinsichtlich Erdung und Sicherheit, siehe den online Applikationshinweis *'Safe operation of a power supply'.*

## 2.5 Gefahr eines elektrischen Schlags

Das Berühren der Kontakte des Netzsteckers oder der Kabel direkt nach der Trennung vom Netz kann zu einem elektrischen Schlag führen. Und aufgrund von geladenen X-Kondensatoren, kann gefährliches Potential zwischen 'plus' oder ‘minus’ DC-Anschlussklemme und PE bestehen oder entstehen. Auch wenn die DC-Anschlussklemmen ausgeschaltet sind, aber das Gerät noch eingeschaltet ist. Daher niemals gleichzeitig PE und einen der DC-Anschlussklemmen berühren mit bloßen Händen.

## 2.6 Verbindung mit dem Versorgungsnetz

Entweder permanent mit dem Versorgungsnetz verbinden oder via einer Industriesteckverbindung entsprechend IEC 60309. „Permanent verbundene Ausrüstung“ oder „Steckbare Ausrüstung Typ B“.

## 2.7 Sicherungen

Sicherungen dürfen ausschließlich von autorisiertem Delta Elektronika-Service-Personal ausgetauscht werden, um Brandgefahr dauerhaft auszuschließen.

## 2.8 AC-Eingangsleistung

Verwenden Sie keine AC-Versorgung, welche die AC-Eingangsspannung und Frequenzleistung dieses Geräts überschreitet. Die AC-Eingangsspannung und Frequenzleistung der Delta Elektronika-Stromversorgungsserie sind im beiliegenden Datenblatt angegeben.

## 2.9 Spannungsführenden Stromkreise

Bedienungspersonal darf die Geräteabdeckungen nicht entfernen. Interne Einstellungen oder Bauteileaustausche sind ausschließlich qualifiziertem Personal von Delta Elektronika gestattet. Bauteile nie bei eingestecktem Stromkabel austauschen. Um Verletzungen zu vermeiden, vor dem Berühren von Bauteilen immer den Strom trennen, externe Spannungsquellen entfernen und Stromkreise entladen.

## 2.10 Teileaustausch & Modifikationen

Teileaustausch und Modifikationen sind ausschließlich autorisiertem Delta Elektronika-Service-Personal gestattet. Reparaturen am Gerät dürfen nur durch eine Delta Elektronika-Serviceeinrichtung durchgeführt werden.

## 2.11 Entfernung von (Sicherheits-) Abdeckungen

Sicherheitsabdeckung(en) werden verwendet, um potenziell gefährliche Spannungen abzudecken. Beachten Sie Folgendes, wenn Sie die Sicherheitsabdeckung(en) entfernen:

- Gerät ausschalten, Gerät von dem AC-Versorgungsnetz und DC-Anwendung trennen.
- Warten Sie 5 Minuten um interne Kondensatoren zu entladen. Abschrauben und entfernen von Abdeckung(en).
- Bevor Sie das Gerät wieder mit dem Versorgungsnetz verbinden, montieren Sie vorher jedes Mal die Abdeckung(en).

## 2.12 Handhabung und Montage

**Warnung!** Einheit Gewicht ist 10kg! Beim Auspacken oder Umziehen vorsichtshalber: Heben Sie mit 2 Personen an oder benutzen Sie ein Liftwerkzeug. Gefahr der Zerkleinerung der Gliedmaßen unter Einheit.
Risiko des Schneidens: Einheit hat scharfe Kanten und Ecken!

**Warnung!** Keine Wandmontage oder Deckenmontage erlaubt! Gefahr der Zerkleinerung unter Einheit. Nur Einheit horizontal montieren, auf eine stabile Oberfläche stellen oder Rack-Montage verwenden.

## 2.13 Rotierender Lüfter, thermischer Verbrennung

Für die Kühlung des Geräts ist ein richtiger Luftstrom erforderlich. Dies ermöglicht den Betrieb bei voller Leistung und einer längeren Lebensdauer. Wenn das Gerät überhitzt wird, schaltet sich die Stromversorgung herunter, bis das Gerät wieder abgekühlt ist.

**Warnung!** Top-Abdeckung und Lüfter Auspuffs können heiß werden. Vermeiden Sie diese zu berühren, während Sie das Gerät mit hoher Leistung bedienen!

**Warnung!** Blockieren Sie keine Lüfter Öffnungen oder Luftabsaugungen. Versuchen Sie nicht, Lüfter Öffnungen durch ein Objekt zu betreten, um Lüfter zu behindern. Lange Haare können in Ventilator stecken bleiben, tragen Sie ein Haarnetz, wenn Sie lange Haare haben.
**Warnung!** Schließen Sie keine Kabel an die DC-Anschlussklemmen an, während das Gerät eingeschaltet ist. Plötzliches Machen oder Brechen von hohen Gleichstrom kann große Funken verursachen, auch bei niedriger Spannung. Gefahr von thermischen Verbrennung und Feuer!

## 2.14 Elektromedizinische Geräte

**Warnung!** Hohe Ströme können durch die DC-Anschlussklemmen laufen. Diese Ströme verursachen starke Magnetfelder. Kommen Sie nicht in die Nähe, wenn Sie ein elektromedizinisches Gerät wie einen Herzschrittmacher haben.

## 2.15 Umgebungsbedingungen

Die Stromversorgungssicherheitszulassung von Delta Elektronika gilt für die folgenden Betriebsbedingungen:

- Gebrauch : Nur Innengebrauch. **Warnung!** Nicht für die Verwendung in Gegenwart von Kindern oder Tieren vorgesehen!
- Umgebungstemperatur : -20 bis 50 °C.
- Maximale relative Luftfeuchtigkeit : 95%, nicht kondensierend, bis zu 40 °C, 75%, nicht kondensierend, bis zu 50 °C
- Höhe : Nicht über 2000 m Meeresspiegel verwenden.
  **Warnung!** Elektrische Creepage & Clearance nicht gültig für größere Höhen!
- Verschmutzungsgrad : 2

## 2.16 Symbole und Markierungen

| | | | |
|---|---|---|---|
| ⚠ | *Vorsichtsgefahr bei elektrischen Schlag.* | ⏚ | *PE-leiterklemme.* |
| ⚠ | *Bedienungsanleitung Symbol. Das Gerät wird mit diesem Symbol gekennzeichnet, wenn der Benutzer auf die Bedienungsanleitung verweisen muss.* | O | *Aus (Versorgungsnetz).* |
| | | I | *Ein (Versorgungsnetz).* |

## 2.17 Canada

Dieses Produkt wurde nach den Anforderungen von CAN/CSA-C22.2 Nr. 61010.1, zweite Ausgabe, einschließlich Änderungsantrag 1, oder einer späteren Version desselben Standards getestet, die die gleichen Testanforderungen enthält.

## 2.18 cTUVus

# WEEE (Waste Electrical & Electronic Equipment)

## 2.19 Korrekte Entsorgung dieses Produkts

Anwendbar in der Europäischen Union.

Diese Kennzeichnung auf dem Produkt, seiner Verpackung oder seiner Literatur weist darauf hin, dass es am Ende seiner Lebensdauer nicht mit anderen Abfällen entsorgt, sondern separat gesammelt werden sollte, um es verantwortungsvoll zu recyceln, um die nachhaltige Wiederverwendung von Material zu fördern.

# 3 CONSIGNES DE SÉCURITÉ – Série SM1500

## 3.1 Mise en garde

Les précautions de sécurité suivantes doivent être suivies dans toutes les phases de fonctionnement, d'entretien et de réparation de cet appareil. Le non-respect des précautions de sécurité ou des avertissements contenus dans le présent document enfreint les normes de sécurité concernant la conception, la production et l'utilisation prévue de cet appareil et peut endommager les dispositifs de protection intégrés. Delta Elektronika n'est pas responsable si l'utilisateur ne se conforme pas à ces exigences.

## 3.2 Catégorie d'installation

Les alimentations Delta Elektronika ont été affectées à la catégorie d'installation II (catégorie de surtension II).

## 3.3 Mise à la terre des bornes de raccordement secteur (bornes d'alimentation CA)

Ce produit est un appareil de classe 1. Pour minimiser le risque de choc électrique, l'appareil doit être connecté au réseau d'alimentation CA à l'aide d'un câble d'alimentation à trois fils. Dans ce cas, le conducteur de protection doit être fermement connecté à une connexion de mise à la terre électrique (conducteur de protection) à la source d'alimentation. Pour les appareils câblés au réseau d'alimentation, la borne de mise à la terre de protection doit être connectée au connecteur de mise à la terre de sécurité avant d'effectuer une autre connexion. Une interruption du conducteur de protection ou une séparation de la pince de mise à la terre de protection peut entraîner un choc électrique pouvant blesser les personnes.

## 3.4 Mise à la terre des bornes CC

Si la borne CC d'un appareil est conçue pour recevoir ou obtenir un maximum de 60 VDC et que la borne CC 'moins' ou 'plus' est mise à la terre, la tension peut être considérée comme sûre pour:
- Bornes CC et connecteurs de circuit de lecture (marque 'Sense').
- Signaux de programmation/moniteur/état, InterLock, connecteurs maître/esclave, relais ACF/DCF.
- Toutes les interfaces Delta Elektronika

**Attention!** Si le bornier CC 'plus' peut dépasser 60 VDC par rapport au bornier CC 'moins', des mesures externes supplémentaires doivent être prises pour assurer l'isolation de sécurité des bornes CC et des connexions de détection.

**Attention!** Si le terminal CC 'moins' peut dépasser 60 VDC/42,4 Vpk par rapport à la mise à la terre, des mesures externes supplémentaires doivent être prises pour assurer l'isolation de sécurité pour :
- les bornes CC et les connecteurs de circuit de lecture (marque 'Sense').
- Signaux de programmation/moniteur/état, InterLock, connecteurs maître/esclave, relais ACF/DCF.
- Interfaces avec isolation fonctionnelle, interfaces sans isolation de sécurité.

**Attention 1:** Si les deux bornes CC d'un dispositif basse tension sont sans potentiel ou si les bornes CC sont connectées en série avec une haute tension EXTERNE CA ou CC, le bornier CC 'moins' peut dépasser la valeur de sécurité en termes de mise à la terre comme spécifié dans l'avertissement ci-dessus.
**Attention 2:** Bien qu'un appareil haute tension fonctionne à une tension de sécurité inférieure à 60 VDC, il doit toujours être considéré comme un appareil haut tension pour la sécurité! Un fonctionnement incorrect, une erreur de programmation ou une erreur externe peut entraîner une tension de sortie CC incertaine et élevée.
**Attention 3:** Si un appareil haute tension est programmé directement via un PC ou une connexion réseau, ou si le terminal CC 'moins' doit être connecté au PE, ou si une interface avec isolation de sécurité doit être nécessaire ! Pour plus d'informations et des schémas de circuit concernant la mise à la terre et la sécurité, voir la note d'application en ligne 'Fonctionnement sûr d'une alimentation'.

## 3.5 Risque de choc électrique

Toucher les contacts de la fiche d'alimentation ou des câbles immédiatement après la déconnexion du secteur peut entraîner un choc électrique. Et en raison des condensateurs X chargés, un potentiel dangereux entre le terminal CC 'plus' ou 'moins' et le PE peut exister ou survenir. Même si les bornes CC sont éteintes, mais que l'appareil est toujours allumé. Par conséquent, ne touchez jamais PE et l'un des terminaux DC à mains nues en même temps.

## 3.6 Connexion au réseau d'alimentation

Soit en permanence, soit par une connexion enfichable industrielle conformément à la norme CEI 60309. 'Équipement connecté en permanence' ou 'Équipement enfichable de type B'.

## 3.7 Fusibles

Les fusibles ne peuvent être remplacés que par le personnel de service autorisé de Delta Elektronika afin d'éliminer définitivement le risque d'incendie.

## 3.8 Alimentation d'entrée CA

N'utilisez pas une alimentation CA qui dépasse la tension d'entrée CA et la puissance de fréquence de cet appareil. La tension d'entrée CA et la puissance de fréquence de la série d'alimentations Delta Elektronika sont spécifiées dans la fiche technique ci-jointe.

## 3.9 Circuits sous tension

Les opérateurs ne doivent pas retirer les couvercles de l'appareil. Les réglages internes ou les remplacements de composants ne sont autorisés qu'au personnel qualifié de Delta Elektronika. Ne remplacez jamais les composants par le câble d'alimentation branché. Pour éviter les blessures, débranchez toujours le courant avant de toucher les composants, retirez les sources de tension externes et les circuits de décharge.

### 3.10 Remplacement et modifications des pièces

Le remplacement et les modifications des pièces ne sont autorisés qu'au personnel de service agréé de Delta Elektronika. Les réparations de l'appareil ne peuvent être effectuées que par un centre de service Delta Elektronika.

### 3.11 Retrait des couvercles (de sécurité)

Les couvercles de sécurité sont utilisés pour couvrir les tensions potentiellement dangereuses.
Lorsque vous retirez le ou les couvercles de sécurité, tenez compte des éléments suivants :

- Éteignez l'appareil, débranchez l'appareil du réseau d'alimentation CA et débranchez l'application CC.
- Attendez 5 minutes pour décharger les condensateurs internes. Dévissez et retirez-le(s) couvercle(s).
- Avant de reconnecter l'appareil au réseau d'alimentation, installez-le(s) couvercle(s) à chaque fois.

### 3.12 Manipulation et montage

**Attention!** Le poids unitaire est de 10 kg! Lors du déballage ou du changement par précaution: Soulevez avec 2 personnes ou utilisez un outil de levage. Danger d'écraser les membres sous l'unité. Risque de coupe: L'unité a des arêtes vives et des coins!

**Attention!** Aucun montage mural ou au plafond n'est autorisé! Danger d'écrasement sous l'unité. Montez uniquement l'unité horizontalement, placez-la sur une surface stable utilisez un support en rack.

### 3.13 Ventilateur rotatif, combustion thermique

Un flux d'air approprié est nécessaire pour refroidir l'appareil. Cela permet un fonctionnement à pleine puissance et une durée de vie plus longue. Si l'appareil surchauffe, l'alimentation s'éteindra jusqu'à ce que l'appareil ait refroidi à nouveau.

**Attention!** Le couvercle supérieur et les échappements du ventilateur peuvent devenir chauds. Évitez de les toucher lorsque vous utilisez l'appareil avec une puissance élevée!

**Attention!** Ne bloquez pas les ouvertures des ventilateurs ou les bouches d'aération. N'essayez pas d'entrer dans les ouvertures des ventilateurs à travers un objet pour obstruer les ventilateurs. Les cheveux longs peuvent rester coincés dans un ventilateur, portez un filet à cheveux si vous avez les cheveux longs.
**Attention!** Ne connectez pas de câbles aux bornes CC lorsque l'appareil est allumé.
Soudain, faire ou casser un courant continu élevé peut provoquer de grandes étincelles, même à basse tension. Danger de combustion thermique et d'incendie!

### 3.14 Équipement électromédical

**Attention!** Des courants élevés peuvent traverser les bornes CC. Ces courants provoquent de forts champs magnétiques. Ne vous approchez pas si vous avez un appareil électromédical comme un stimulateur cardiaque.

### 3.15 Conditions ambiantes

L'approbation de sécurité de l'alimentation de Delta Elektronika s'applique aux conditions de fonctionnement suivantes :

- Utilisation : Utilisation à l'intérieur seulement. **Attention!** Non destiné à être utilisé en présence d'enfants ou d'animaux!
- Température ambiante: -20 à 50 °C.
- Humidité relative max: 95%, sans condensation, jusqu'à 40 °C, 75 %, sans condensation, jusqu'à 50 °C
- Altitude: Ne pas utiliser au-dessus de 2000 m niveau de la mer.
  **Attention!** Creepage & Clearance électrique non valable pour les altitudes plus élevées!
- Degré de contamination: 2

### 1. Symboles et marqueurs

⚠ *Risque de prudence en cas de choc électrique.*

⚠ *Icône du manuel d'instructions. L'appareil est marqué de cette icône lorsque l'utilisateur doit se référer au manuel d'instructions.*

⏚ *Terminal conducteur de terre de protection.*

O *Désactivé (réseau d'approvisionnement).*

I *A (réseau d'approvisionnement).*

### 3.17 Canada

Ce produit a été testé conformément aux exigences de la norme CAN/CSA-C22.2 no. 61010.1, deuxième édition, y compris l'amendement 1, ou d'une version ultérieure de la même norme qui contient les mêmes exigences d'essai.

### 3.18 cTUVus

## DEEE (Déchets d'équipements électriques et électroniques)

### 3.19 Élimination correcte de ce produit

Applicable dans l'Union européenne.

Cet étiquetage sur le produit, son emballage ou sa documentation indique qu'il ne doit pas être éliminé avec d'autres déchets en fin de vie, mais doit être collecté séparément afin de le recycler de manière responsable afin de promouvoir la réutilisation durable des matériaux.

# 4 GENERAL

## 4.1 DC OUTPUT

- The SM15-100, SM35-45, SM52-30, SM52-AR-60, SM70-22, SM120-13, SM300-5 and the SM400-AR-8 can either be used as a constant voltage source with current limiting or as a constant current source with voltage limiting. The change of mode occurs sharply at the crossing of the voltage and current settings. Fig. 4 - 1 shows the output ranges.
- The SM52-AR-60 and the SM400-AR-8 feature an AUTORANGING facility where the power supply automatically switches over between two current ranges. This switching, which is unnoticeable for the user, results in a versatile power supply with twice the output voltage range. This means that for the SM52-AR-60 the maximum output power of 1560 W is available at both 26 V and 52 V. For the SM400-AR-8 this is 1600 W at both 200 V and 400 V.
- DISPLAY CV/CC SETTINGS FUNCTION
  The settings of the voltage and current control (also when programmed) can be observed on the front panel meters by pressing the Display CV/CC Set- tings button. This allows the current limit to be set when operating in the CV the voltage limit to be set C mode without opening the load leads.
- OVERLOAD PROTECTION
  The power supply is fully protected against all overload conditions, including short circuit.

## 4.2 AC INPUT VOLTAGE

- The power supplies have a wide AC input voltage range.
- The unit needs a single-phase input voltage. At voltages below about 120 VAC the output power must be derated, see specifications in the datasheet.

## 4.3 AC INPUT CURRENT

- The unit has active power factor correction (PFC). The input current will therefore almost be a sine wave. This means that the RMS-value and the harmonic distortion of the AC input current will be relatively low.
- The peak inrush current is electronically limited. Switching on and off repeatedly will not result in excessive currents like with NTC circuits.

## 4.4 STANDBY AC INPUT POWER

- The unit consumes very little power when in standby. This makes it possible to leave the AC input power on when the output is disabled using the Output On/Off push button on front panel or the Remote ShutDown input (pin 5 on connector CON E on the rear panel).

## 4.5 EFFICIENCY

- The efficiency is very high and constant over a wide DC output current range.
- High efficiency means low power loss and low heat generation.

## 4.6 CV REGULATION

- The specified CV-load regulation value is measured directly on the DC power terminals. This is because at high current, a few cm of cable can have a voltage drop of several mV.

## 4.7 CC REGULATION

- For accurate CC-load regulation, do not use external voltage sensing.
- A voltage between S- and minus output will create an error of about 0.04 % per volt.
- A voltage between S+ and + is not critical. The CC-stability is also affected by external voltage sensing.
- **Note:** when the unit operates in CC-mode, the **DCF-LED** will be on. When the unit is in CC-mode most of the time, it is possible to disable the LED with DIP switch 3 on SW1 (rear panel).

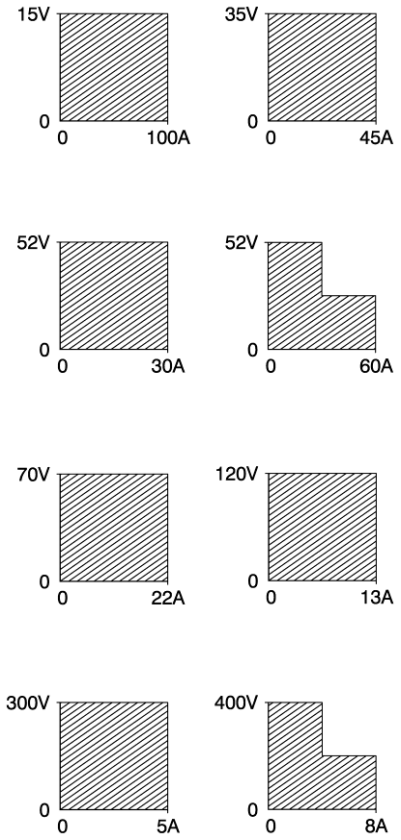


*fig 4 - 1*
*DC Output voltages and currents.*
*Every point in hatched area can be used*

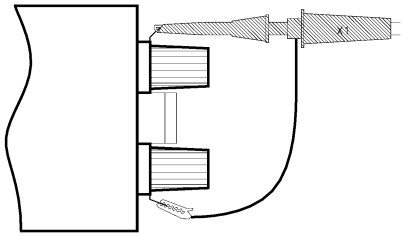

*fig 4 - 2*
*Measuring ripple voltage*
*WRONG!*

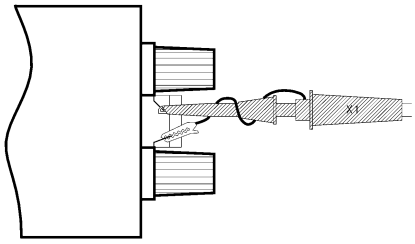

*fig 4 - 3*
*Measuring ripple voltage*
*RIGHT!*

## 4.8 RIPPLE & NOISE

- The DC output ripple is very low with almost no spikes. The specified ripple voltage is measured directly on the DC power terminals using a probe with very short connections. This to avoid pick up of magnetic fields, see fig. 4 - 2 and fig. 4 - 3.
- At low temperatures like -20°C the ripple increases. By using high quality electrolytic capacitors, the increase is relatively low.

## 4.9 ANALOG PROGRAMMING

- The DC output voltage and current can be programmed by an external analog voltage. This programming is very accurate and linear. The levels are all standardized on 5 V.
- For the other units, the inputs have a protection circuit formed by a series resistor and a parallel zener (see fig. 4 - 4). The capacitor limits the speed to a safe value. **Note that the analog inputs (and outputs) are not floating, but the common is connected to the 'minus' DC output terminal.** Wrong connection of Ø can cause earth loops which can trip the fuse. After removing the fault, the fuse will reset (PTC-fuse). For isolated programming see next paragraph.

## 4.10 ISOLATED ANALOG PROGRAMMING

- To prevent earth loops which can cause programming errors, use an isolated programming source. If this is not possible, use the optional **ISO AMP CARD** which can be built inside the unit.
- With the ISO AMP CARD earth loops between the unit and the programming source are prevented.

## 4.11 ETH / RS232 PROGRAMMING

- The Delta Elektronika PSC**-ETH and PSC-232** controllers can be factory installed inside the unit.
- Voltage and current can easily be programmed and read back. Also, all status outputs can be read by the computer.

## 4.12 MONITORING OUTPUTS

- The monitor outputs give a voltage 0 - 5 V proportional to the output current or voltage. The output current can easily be measured using the I-monitor (see fig. 4 - 6). The monitor outputs are buffered with op-amp's and protected with series resistors and parallel zener diodes (see fig. 4 - 7). The table in fig. 4 - 5 shows the impedance levels of the monitoring outputs. For using Imon on a pulsating load, see paragraph 20) of this chapter.

## 4.13 +12 V ON PROGRAMMING CONNECTOR

- The +12 V on the programming connector can be used to supply external circuits. The output is current limited but should not be overloaded. The fuse F27_3 on P650 could blow. The fuse F27_3 also protects the internal circuit; in case an external high voltage is applied by accident. Note: this fuse is a special 600 V type, always replace with the same type.

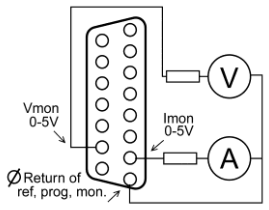


*fig 4 - 6*
*External meters using monitor outputs.*

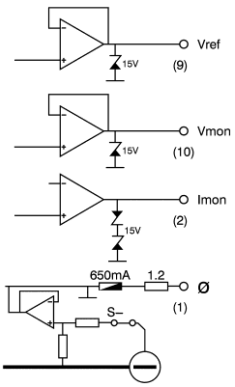


*fig 4 - 7*
*Buffered monitor outputs.*

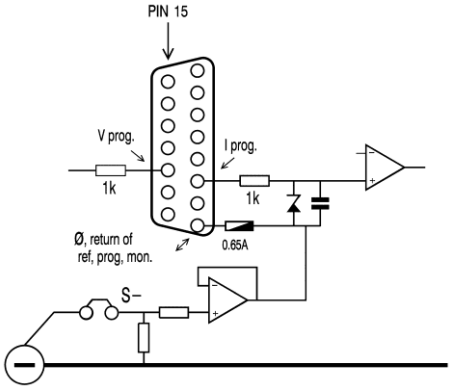


*fig 4 - 4*
*Programming inputs (internal circuit).*

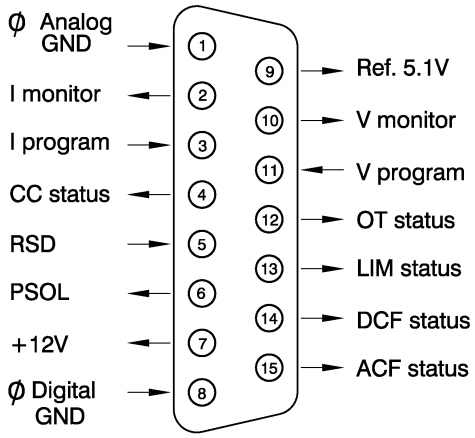


| pin | Description, see par.12)...17) for details |
|---|---|
| 1 | Ø, return of reference, prog. inputs and monitor outputs (Ro = 1.2 Ohm). |
| 2 | current monitor output 0 - 5 V (Ro = 1.2 Ohm, Io max = 4 mA) |
| 3 | current programming input (0 - 5 V), Ri = 8 MOhm |
| 4 | CC status output, logic 1 = CC mode (5 V / 500 Ohm) |
| 5 | Remote ShutDown (4 - 12 V), Ri = 5 kOhm |
| 6 | PSOL status output, logic 1 = PSOL (5 V / 500 Ohm) |
| 7 | +12 V output (Ro = 3 Ohm, Io max = 0.2 A) |
| 8 | Ø, return of status outputs, +12 V and Remote ShutDown |
| 9 | reference voltage 5.1 V (Ro = 1.2 Ohm, Io max = 4 mA) |
| 10 | voltage monitor output 0 - 5 V Ro = 1.2 Ohm, Io max = 4 mA) |
| 11 | voltage programming input (0 - 5 V) Ri = 8 MOhm |
| 12 | OT - status output, logic 1 = OT (5 V / 500 Ohm) |
| 13 | LIM - status output, logic 1 = LIM (5 V / 500 Ohm) |
| 14 | DCF - status output, logic 1 = DCF (5 V / 500 Ohm) |
| 15 | ACF - status output, logic 1 = ACF (5 V / 500 Ohm) |

*fig 4 -5*
*Connections ANALOG PROG. CONNECTOR.*

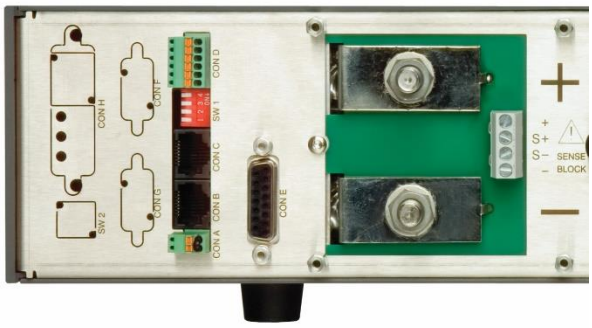


*fig 4 – 8 Location of output terminals and analog programming connector on the rear panel.*

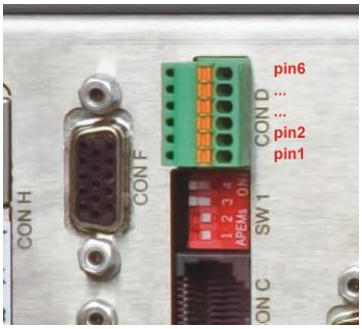


*Connector D numbering.*

| | |
|---|---|
| CON A | Interlock Connector |
| CON B | Master connector for Master / Slave operation (output) |
| CON C | Slave connector for Master / Slave operation (input) |
| CON D | Relay Outputs, contacts 1 - 6 |
| CON E | Analog Programming Connector (not available when the optional ISO AMP is installed, see CON H) |
| CON F | PSC-232, from PC or previous PSC (optional) |
| CON G | PSC-232, to next PSC (optional) |
| CON H | ISO AMP CARD (optional) instead of CON E. |
| SW 1 | Various settings, see table at the bottom of this page. |
| SW 2 | Settings for PSC-232 (optional) |

*fig 4 -9 Connectors and switches on the rear panel.*

## 4.14 STATUS OUTPUTS

- All the status outputs are logic outputs. Logic "0" means the output is 0 V, logic "1" means the output is 5 V (Ro = 500 Ohm). This makes it possible to drive directly: an opto-coupler, a TTL gate or a CMOS gate.
- The Limit Status or **LIM-status** is "1" in case the DC output voltage or current reaches the limit setting. Which limit circuit is active can be seen on the front panel LED's.
- The Over Temperature Status or **OT-stat**us is "1" in case of an over temperature, the OT LED will be on, and the output shuts down. As a pre-warning the OT LED starts to blink when the unit runs hot but the situation of over temperature is not reached yet. The status will still be low when the LED is blinking.
- The Current Control Status or **CC-status** output is "1" when the unit is in CC-mode.
- The Power Sink OverLoad Status or **PSOL-status** output is "1" when the optional Power Sink is overloaded or overheated.
- The AC-Fail Status or **ACF-status** output is "1" in case the mains voltage is below 115 $V_{peak}$ (not $V_{rms}$) for more than 10ms. Note that if you want the ACF-status to switch before the DCF-status, the hold-up time has to be >10ms. This can be achieved by reducing the load, see paragraph 25) of this chapter.
- The DC-Fail Status or **DCF-status** output is "1" when the DC output voltage is either 5% below or above the set point.
- When the unit is in CC-mode, DCF will always be "1", see previous paragraph.

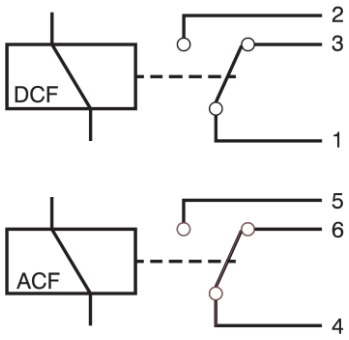


*fig 4 - 10*
*Status relay outputs on CON D. This situation gives the relay positions during fault condition.*

| Switch no. | Left position | Right position | Default Setting |
|---|---|---|---|
| SW 1 – 1 | Programming via 15pole connector CON E (analog). | Optional programming with e.g. PSC-232, ISO AMP CARD | Left |
| SW 1 – 2 | 'Output On' after mains on | 'Output Off' after mains on | Right |
| SW 1 – 3 | DCF LED enabled | DCF LED disabled<br>(DCF status and DCF relay are still enabled) | Left |
| SW 1 – 4 | Parallel Master / Slave operation | Series Master / Slave operation | Left |
| SW 1 – 5* | After switching mains on, the unit will start with the same settings for the voltage and the current as it had before switching mains off | After switching mains on, the unit will always start up with a voltage setting of 0 V and a current setting of 0 A. Once the unit is switched on, the voltage and current can be set to the preferred value. | Right |
| * = SW1-5 only on units with optional digital encoders (option P220). | | | |

## 4.15 STATUS RELAY OUTPUTS

- The power supply has 2 status relay outputs, with each a change-over contact. They are connected to connector CON D. The pins 1,2,3 are connected to the DCF-relay and pins 4,5,6 to the ACF-relay (see fig. 4 - 8 and 4 - 10).

## 4.16 FUNCTION SWITCHES ON SW1

- In the table on the previous page the functions of the DIP switches 1-5 of switch SW1 at the rear side are explained.

## 4.17 REMOTE SHUTDOWN (RSD)

- A voltage of +4...+12 V on the RSD input on the programming connector CON E will switch off the output of the unit.
- It is also possible to use a relay contact or a switch to shut the unit down (see fig. 4 - 11). In standby mode the power supply consumes very little power.

## 4.18 INTERLOCK

- The Interlock connector CON A has 2 pins which have to be connected together to enable the unit.
- As soon this connection is interrupted, the DC output of the unit shuts down. It can be used in combination with door contacts (safety precaution) or as an emergency stop.
- In case the connection is interrupted the RSD LED will light. In contrast with Remote ShutDown, also the DCF LED will be on, DCF status will be high, and the relay contact will change. Once the inputs are reconnected, the DC output will be on again.
- The interlock circuit is at the same level as the analog ground, the S- and the minus DC power terminal. The interlock circuit needs voltage free contacts and can not be connected in parallel or series with other interlocks.

## 4.19 PROGRAMMING SPEED

- The rise and fall time are measured with a step waveform at the CV prog. input. Programming from a low to a high output voltage is nearly load independent, but programming down to a low voltage takes more time on lighter loads. This is caused by the output capacitors, which can only be discharged by the load because the power supply cannot sink current. With the Power Sink option, also the programming down speed is nearly load independent.
- When having a unit with a high-speed programming option, the rise and fall time is 5 to 25 times faster (see datasheet). The programming source must be floating or otherwise an ISO AMP CARD must be used, a non-floating source will result in slope distortion.
- When using high speed programming it is generally not recommended to use remote sensing or serial / parallel operation. Consult factory for advice. Note that the output ripple is higher.

## 4.20 PULSATING LOAD

- To avoid overheating the DC output capacitors, the AC component of the load current should be limited (fig. 4 - 13).
- One method of decreasing the AC current through the output capacitor is by using a large external electrolytic capacitor in parallel with the load. Care must be taken so that the capacitor in combination with the lead inductance will not form a series resonant circuit!
- When using remote sensing on a pulsating load (for instance a DC-motor), use a capacitor in series with a resistor over the load (see fig. 4 - 14). Like this the AC-component caused by the pulsating of the load is filtered.
- Note: in case of a pulsating load, the I monitor voltage will not exactly match the output current. This is mainly caused by the current through the output capacitors. Remote sensing will worsen this effect.

## 4.21 INSULATION

- For safety the insulation of the separating components (transformers) between mains in and DC output is tested at 3750 Vrms for 1 minute. This is tested before assembly.

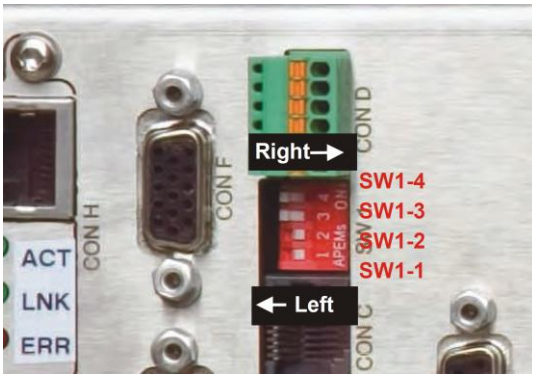


*fig 4 - 11*
*Settings of DIP switch SW1.*

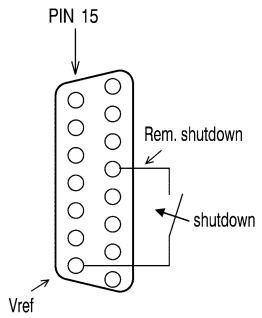


*fig 4 - 12*
*Remote Shut Down using a relay contact.*

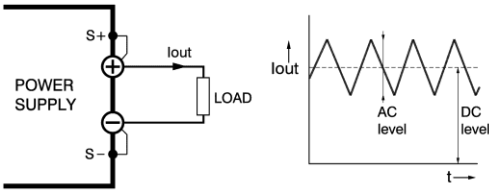


*fig 4 - 13*
*Pulsating load current.*

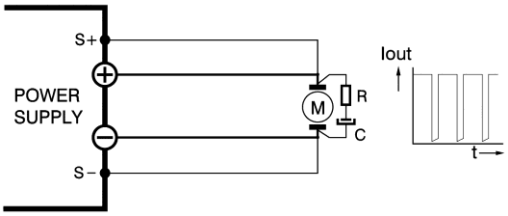


*fig 4 - 14*
*Remote sensing on a pulsating load.*

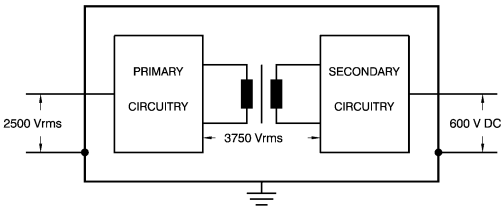


*fig 4 - 15*
*Insulation test voltages.*

- Warning! The 3750 Vrms cannot be tested afterwards on the assembled unit because the insulation between the components on the AC side to the case (like the bridge rectifier) is specified at 2500 Vrms. Since the insulation of DC power terminals -> case is 600 VDC, the insulation of the primary components to case will break down when 3750 Vrms is applied between mains in and DC output (2500 Vrms + 600 VDC < 3750 Vrms) (see also fig. 4 - 15).
- Note: when testing the insulation, take care to charge and discharge the capacitors between mains in - case and DC output - case slowly (e.g., in one second). This to prevent high peak currents, which could destroy the power supply. Make sure to discharge the capacitors completely before using it again.

## 4.22 RFI SUPPRESSION

- Both the mains input and DC output have RFI filters, resulting in very low conducted RFI to the line and load. Due to the output filter, the output voltage is very clean with almost no spikes.

## 4.23 OPERATING TEMP

- At full power the operating temperature range is –20 to +50 °C. From 50 to 60 °C the DC output current has to be derated linearly to 75 % at 60 °C (see fig. 4 - 16). These temperatures hold for normal use, i.e., the ventilation openings on the left and right side must be free.

## 4.24 THERMAL PROTECTION

- A thermal switch shuts down the DC output in case of insufficient cooling. The OT status will be high. After cooling down the unit will start working again.
- The OT-LED on the front panel will be on and the OT-status signal will be "1" in case of a tripped thermal protection.
- As a pre-warning the OT-LED blinks (status will still be low), this will start before the power supply shuts down.

## 4.25 HOLD - UP TIME

- The hold - up time depends on the load and the DC output voltage.
- A lighter load or a lower DC output voltage result in a longer hold-up time (see fig. 4 - 17).

## 4.26 TURN ON DELAY

- The DC output voltage is available about 0.2 sec after mains switch on.

## 4.27 AC INRUSH CURRENT

- The inrush current is electronically limited.
- Repeatedly switching on and off does not change the maximum peak current.
- Switching on and off at a fast rate can overheat the inrush current limiter. With the result that the unit does not start anymore. After cooling down (mains switched off) it will be OK again.

## 4.28 DC LOAD SENSING (REMOTE SENSING)

- The DC voltage at the load can be kept constant by remote sensing. This feature is not recommended for normal use but only when the load voltage is not allowed to vary a few millivolts. Always use a **shielded cable** for sensing.
- In order to compensate for voltage drop across the load leads, the unit will have to supply a higher voltage (fig. 4 - 18):

  ** Uout = (voltage drop across each lead) + (voltage across the load).*

- The voltage limit reads the voltage directly at the output terminals. The setting for the limit must therefore be increased by the total voltage drop across the load leads.
- The voltage display on the front panel and the voltage monitor output on CON E are connected to the sense leads and therefore read the voltage across the load and **not** the voltage on the DC output terminals.

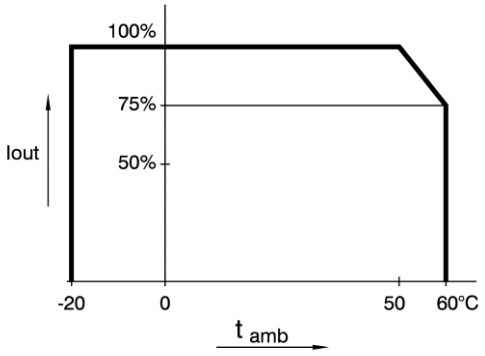


*fig 4 - 16*
*Operating temperature ranges.*

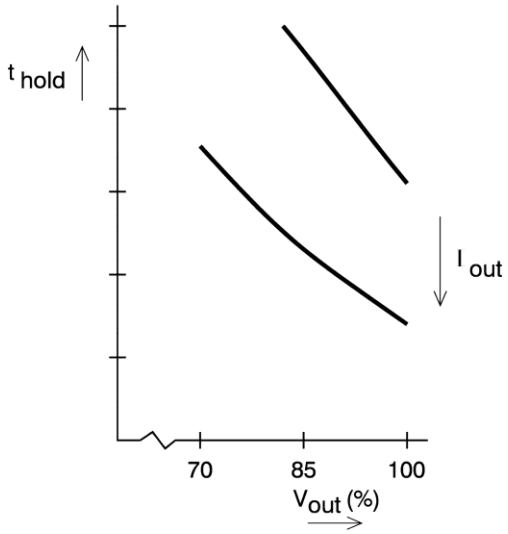


*fig 4 - 17*
*Hold-up time vs $V_{out}$ with $I_{out}$ as a parameter.*

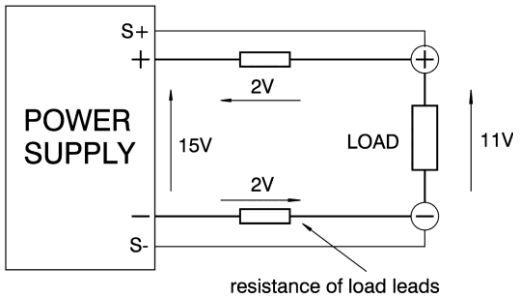


*fig 4 - 18*
*Remote sensing, voltage drop in load leads subtracts from maximum output.*

- The sense leads are protected against accidental interruption. The maximum voltage between the DC output terminals and the sense inputs is limited at 2.5 V.
- For sensing on a pulsating load see paragraph 20) of this chapter.

## 4.29 SERIES OPERATION

- Series operation is allowed up to 600 V total voltage. The power supplies can be connected in series without special precautions.
- For easier control, Master / Slave operation is recommended (see fig. 4 - 19).
- By using the Master / Slave series feature a **dual tracking** power supply can be made with one unit as master and one as slave.
- For series operation in combination with **Power Sink** option, all units must have a Power Sink built inside otherwise no power can be absorbed.

## 4.30 PARALLEL OPERATION

- Paralleling of the units has no limitations. The power supplies can be connected in parallel without special precautions. For easier control, Master / Slave operation is recommended (see fig. 4 - 19 and fig. 4 - 20).
- Normal parallel operation of **High-Speed Programming** units can give problems, each combination has to be tested first, in combination with the load!
- For parallel operation in combination with **Power Sink** option, only one unit can have a Power Sink. Refer to Power Sink manual for details and restrictions.

## 4.31 MASTER / SLAVE OPERATION

- The Master / Slave feature makes it possible to use power supplies as building blocks to form one large unit (fig. 4 - 20).
- Mixed parallel - series operation is also possible, to a maximum of 600 V.
- The resulting combination of units behaves like one power supply and can be manually controlled or programmed on the master. Figure 3 - 21 shows a computer-controlled Master / Slave parallel combination.
- Connect the different units with standard RJ45 cables (see fig. 4 - 22), using CON B and CON C on the rear side. With DIP switch 4 of switch SW1 the Parallel or Series mode can be selected.
- The slaves will follow the master. The result is true current or voltage sharing in the parallel or series mode respectively.

**Note:** Master / Slave parallel operation is not recommended for more than 3 units or in combination with High-Speed Programming option. Consult factory for a solution.

*fig 4 - 22*
*Use standard UTP cables (RJ45) for Master / Slave operation.*

*<u>Master Unit:</u>*
*Connect CON B to Slave1.*

*<u>Slave unit:</u>*
*Connect CON C to Master.*

*Connect CON B to Slave2.*

***Warning:***
*Never connect CON C to CON C!*

*See next chapter for more details.*

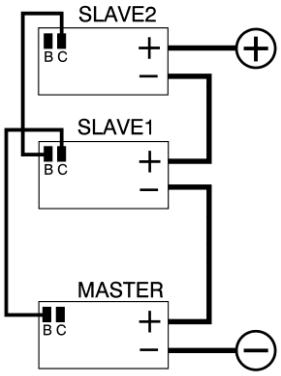


*fig 4 - 19*
*Master / Slave series operation.*

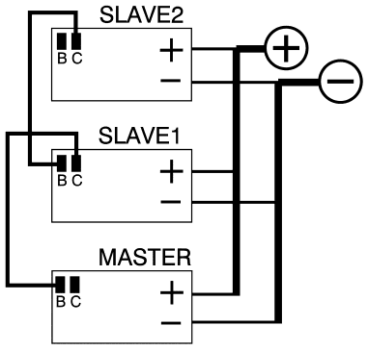


*fig 4 - 20*
*Master / Slave parallel operation.*

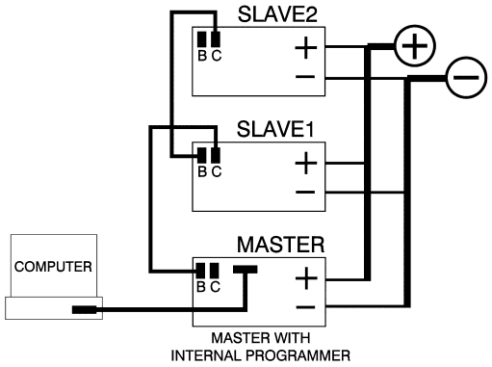


*fig 4 - 21*
*The Master / Slave combination can also be programmed with the interface PSC-232.*

## 4.32 DC VOLTAGE AND CURRENT LIMIT

- The Voltage Limit will protect your circuit from unwanted high voltages. A high DC output voltage could be caused by accidental interruption of leads, accidentally turning up the voltage potmeter, a programming error or a defect in the power supply. The Voltage Limit circuit uses a separate voltage divider connected directly to the output terminals.
- The Current Limit protects your circuit from unwanted high currents.
- The Voltage and Current Limits maintain the output to a safe preset value.
- They do not trip, so no resetting is needed after a fault. It can be very handy to have hardware limits when the power supply is programmed.
- The limits can easily be set by pressing the DISPLAY LIMITS button and adjusting the potentiometers with a screwdriver. The LED's next to the potmeters indicate the activity of each limit, also the LIM-status output will be "1".

## 4.33 POTENTIOMETERS AND ENCODERS

- At the front panel, standard every unit is equipped with knobs for the CV and CC controls and with screwdriver adjustment for the Voltage and Current Limit.
- Optional there is the possibility for digital encoders for the CV/CC-controls, with a very long lifetime and intelligent functions such as variable coarse/fine pitch adjustment, locking of CV/CC-settings and a selectable start-up voltage (start at 0V/0A or at last settings).
- The standard units have analog potentiometers for the CV/CC-controls. Optional they can be equipped with screwdriver adjustment for CV/CC-settings at the front panel or also with digital encoders (option P220). See fig. 4 - 23 for option P001.

## 4.34 COOLING

- A low noise blower cools the unit. The speed of the fan depends on the temperature of the internal heatsink. Normally at 50 °C ambient and full load the fan will not work at full speed.
- A special feature is that the fan blows through a tunnel where the heatsinks are situated, the delicate control circuitry is separated and will not be in the airflow path (see fig. 4 - 24).
- Because the air enters at the left and exits at the right side, it is possible to stack the power supplies, no distance between the units is required. Only the ventilation openings at the left and right side should be free.
- For long life the temperature of the air entering on the left side, should be below 35 °C under normal conditions. Under extreme conditions it should be below 50 °C.

## 4.35 DIMENSIONS

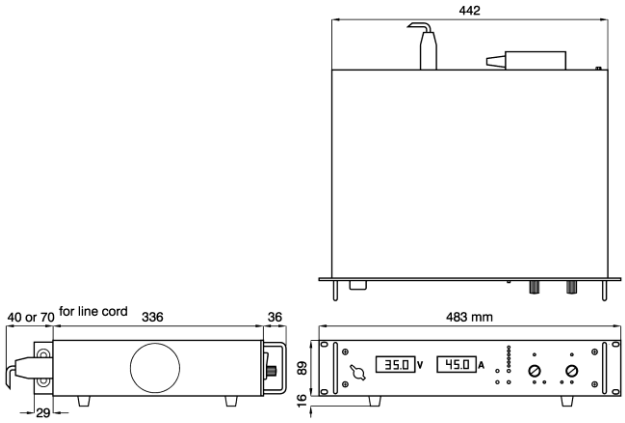


*fig 4 – 25 Unit dimensions.*

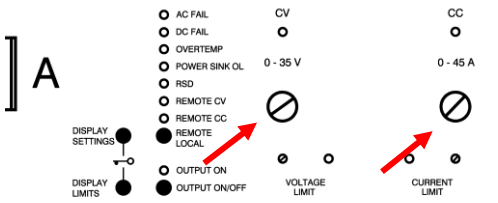


*fig 4 - 23*
*Screwdriver adjustment at front panel.*

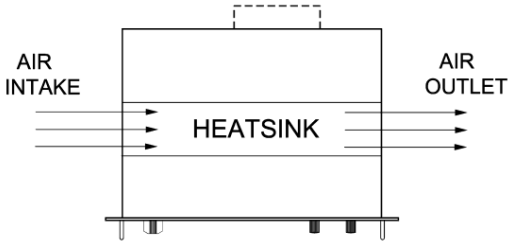


*fig 4 - 24*
*The fan blows through the tunnel, where the heatsinks are situated. Take care to leave the air outlet unobstructed.*

# 5 INSTALLATION

- **Warning!** carefully read the chapter "Safety Instructions" in this manual before connecting or operating the unit!

## 5.1 HUMIDITY & CONDENSATION

- During normal operation, humidity will not harm the power supply, provided the air is not aggressive. The heat normally produced in the power supply will keep it dry.
- Avoid condensation inside the power supply, to prevent break-down. Condensation can occur during a period the power supply has been switched off (or operating at no load) and the ambient temperature is increasing. Always allow the power supply to dry before switching it on again.

## 5.2 TEMPERATURE & COOLING

- The storage temperature range is –40 to +70 °C.
- The operating temperature range at full load is –20 to +50 °C.
- This temperature range only holds when the air-intakes and air-outlets are unobstructed, and the temperature of the air-intake is not higher than +50 °C.
- When the power supply is mounted in a cabinet, please note that the temperature of the air-intake should be kept low and avoid a short circuit in the airflow i.e., the hot air leaving the air-outlets entering the air-intakes again.
- Please note: a lower temperature extends the lifetime of the power supply.

## 5.3 19" RACK MOUNTING

- On both sides in the rack, mount a proper support slide that can hold the weight of the unit. It is advised to use a separate slide for each unit.
- After placing the unit on the slide, add all 4 screws to mount the front panel of the power supply to the vertical rack posts. Use proper screws intended for keeping equipment of this weight in position.
- Assuming the rack is deliberately designed for the weight, stacking of the units is allowed without limitations. See previous paragraph for cooling instructions.

## 5.4 OPERATING THE UNIT FOR THE FIRST TIME

- Check there is no condensation on the unit. If there is, allow some time to dry.
- Check there is a link between + and S+ and between – and S– on the SENSE BLOCK (on rear panel).
- Check there is a link between pins of the Interlock (CON A).
- Set the CV and CC potentiometers to minimum (fully anti clockwise). For units with Option P220, this is not needed. These units are set to start at 0 V - 0 A when operated for the first time.
- For the AC mains, connect a cable that is designed for use at 16A with the specific AC input appliance coupler.
- For the DC output power, see table 5 - 1 for cable diameters and mounting torque.
- For **high DC current** make sure to use low resistive connections between the power supply and the load:
  - *Mount the cable lugs <u>directly</u> on the DC output strips followed by a washer, split washer and a nut (see fig. 5 - 1). Always in this order!*
  - *Never place washers between the lugs and the strips because this can result in excessive heat!*
  - *Only use nuts and washers supplied with the unit.*
- Switch on unit.
- Disable the Keylock function, see next paragraph.
- Check the unit is not in Remote CV or Remote CC (LEDs for this function should be off). Press the REMOTE/LOCAL button until both LEDs are off.
- Turn on DC output by pressing the OUTPUT ON/OFF button.
- Turn both the CV and CC potentiometer a few turns clockwise.
- A voltage should now be present on the output.
- By pressing the DISPLAY CV/CC SETTING button the meters will show the setting of the CV and CC potentiometer.

| Unit | DC Output cable [mm²] | Bolts | Torque [Nm] |
|---|---|---|---|
| SM15-100 | 16 | M8 | 20 |
| SM35-45 | 6 | M8 | 20 |
| SM52-30 | 5 | M8 | 20 |
| SM52-AR-60 | 10 | M8 | 20 |
| SM70-22 | 4 | M8 | 20 |
| SM120-13 | 2.5 | M8 | 20 |
| SM300-5 | 1 | M8 | 20 |
| SM400-AR-8 | 1.5 | M8 | 20 |

*table 5 -1*
*Recommended cable diameters and mounting torque.*

*fig 5 - 1*
*Low resistive cable connection by mounting the cables directly on the DC output strips.*

- By pressing the DISPLAY LIMITS button, the voltmeter will show the setting of the CV-limit and the CC-limit potentiometer.
- Check that the cooling of the unit is not obstructed.

## 5.5 KEYLOCK

- If the function KEYLOCK is activated, it is no longer possible to operate the REMOTE/LOCAL button and the OUTPUT ON/OFF button. This function can be useful to protect the output from accidental shutdown. The function KEYLOCK does not influence the operating of the CV, CC, CV-limit and CC-limit potentiometers.
- **Units with digital encoders:**
  For units with Option P220, also the digital encoders for CV and CC are disabled with the Keylock function. This means settings of the voltage and current do not change when the encoders are operated. It is still possible to operate the analog CV-limit and CC-limit potentiometers.
- **Activate Keylock:**
  Pressing the buttons DISPLAY SETTINGS and DISPLAY LIMITS at the same time for more than 3 seconds, activates the function KEYLOCK. The moment this function is activated, the LEDs for REMOTE CV / CC and for OUTPUT ON will blink a few times.
- **Disable Keylock:**
  Pressing the same buttons again for 3 seconds, disables the Keylock function. The LEDs for REMOTE CV / CC and for OUTPUT ON will blink again to indicate the new setting.

## 5.6 SELECT START-UP MODE

- *The below is only applicable for units with magnetic encoders - option P220:*
  - Setting switch SW1-5 at the rear panel in position *Right*, the unit will always start at 0V / 0A after mains switch on.
  - Setting switch SW1-5 in position *Left*, the settings after mains switch on will be the same as before switching the mains voltage off.

## 5.7 ANALOG PROGRAMMING

- Set DIP switch 1 of SW1 in position *Left* to select CON E for programming.
- Disable Keylock.
- Set the unit in REMOTE CV for voltage programming and/or in REMOTE CC for current programming.
- Use the REMOTE/LOCAL button and push this button several times until the right setting is activated.
- Note that pushing the REMOTE/LOCAL button will shutdown the output to avoid accidental damage to the load.
- Connect the programming voltage source(s) (0 - 5 V) to the analog programming connector CON E on the rear panel (see fig. 5 - 2 and fig. 5 - 3). Always use a shielded **cable** (max. 30 meter) for programming.
- Turn the output on again with the OUTPUT ON/OFF button.
- If only the voltage is programmed, the maximum current can still be set with the CC knob on the front panel and vice versa. If this is not desirable the unit can be ordered with Option P001 or Option P220 in order to have a fixed setting for the CV and the CC knob on the front panel, see also paragraph 34) in previous chapter "General".
- To avoid hum or noise, the programming cable may have to be twisted in some cases.
- To program the unit by current instead of voltage, simply use a parallel resistor as a current to voltage converter.
- Pressing the DISPLAY SETTINGS button will show the programmed values for CV and CC.
- **Warning:** The analog inputs are not isolated from the output. The Ø of the prog. input (pin 1) is internally connected to the S–, the S– is connected to the negative output. To protect the internal wiring a 650 mA self-resetting fuse is connected in series (F27_1 on P650). To avoid earth loops, use an isolated programming source. If this is not possible, see next paragraph for using the optional **ISO AMP CARD**.

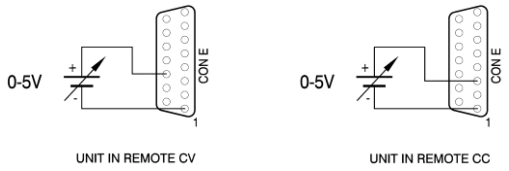


*fig 5- 2*
*Programming by voltage:*
*left voltage -, right current programming.*

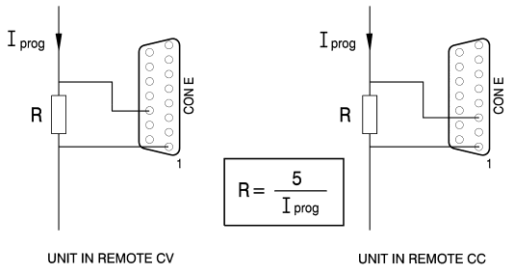


*fig 5 - 3*
*Programming by current:*
*left voltage -, right current programming.*

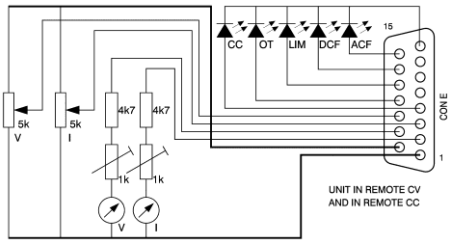


*fig 5 - 4*
*Remote control.*

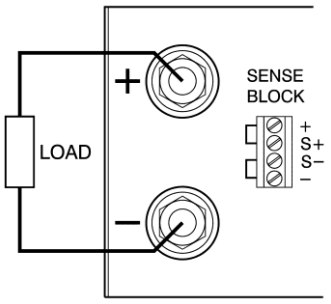


*fig 5 - 5*
*Local sensing.*

## 5.8 ISOLATED ANALOG PROGRAMMING

- For programming via the **ISO AMP CARD**, set DIP switch 1 on SW1 in the position *Right*.
- When the ISO AMP CARD is built inside the unit, CON E has been covered or removed. Use CON H instead. The pinning of CON H is equal to the pinning of CON E.
- For further operating instructions, see previous paragraph.

## 5.9 RS232 PROGRAMMING

- Set DIP switch 1 on SW1 in position *Right* for programming with the **PSC-232** using CON F and G. With DIP switch 1 in this position, the signals $V_{prog}$ (pin 11) and $I_{prog}$ (pin 3) are disabled on CON E. All the other signals can still be used.
- Set the unit in REMOTE CV for voltage programming and/or in REMOTE CC for current programming using the SCPI commands (see manual PSC) or using the REMOTE/LOCAL button on the unit. Push this button several times until the right setting is activated. Setting the unit in REMOTE or LOCAL will cause the output to shutdown to avoid accidental damage to the load. Turn it on again using the SCPI command or with the OUTPUT ON/OFF button.
- Set DIP switch 1 on SW1 in position *Left* to enable CON E again for analog programming. In this position voltage and current programming on CON F and H is disabled. The other functions and signals can still be programmed and read back.

## 5.10 MONITORING OUTPUTS

- The 5 V level is compatible with most interfaces.
- The monitoring outputs can drive a meter directly (fig. 5 - 4).

## 5.11 STATUS OUTPUTS

- The status outputs have a separate Ø connection (pin 8) to avoid unwanted offsets in the programming. This pin is protected with a 650 mA self resetting fuse (F27_2 on P650).

## 5.12 DC LOAD SENSING (REMOTE SENSING)

- Remove the links on the SENSE BLOCK (on rear panel) and connect sense leads (thin **shielded** measuring wires) to S+ and S–. See fig. 5 - 5 and fig. 5 - 6.
- With remote sensing the voltage on the load can be kept constant. The voltage drop in the load leads will be compensated. This feature is not recommended for normal use, because it can easily give problems.
- Max. 2 V per load lead can be compensated. Note that the voltage drop in the leads decreases the max. output voltage rating. In fig. 5 - 7 it can be seen that on a 15 V power supply only 11 V will be available on the load when 2x 2 V compensation is used.
- In order to prevent interference, it is advisable to twist the sense leads. To minimize the inductance in the load leads, keep the leads close to each other. The inductance of the load's leads could give a problem with pulsating loads. In this case a large electrolytic capacitor ($C_d$) in series with a damping resistor ($R_d$) both in parallel with the load will help (see fig. 5 - 6). Check that the capacitor $C_d$ in combination with the load leads and resistor $R_d$ forms a well damped circuit.
- Since the **voltmeter** is internally connected to the sensing terminals, it will automatically indicate the **voltage on the load**. Note that the voltage measured on the load will be lower than on the output terminals.
- The Over Voltage Limit measures the voltage on the output terminals, so the OVL setting should be increased by the total voltage drop in the load leads.

## 5.13 BATTERY CHARGER

- The CV / CC regulated power supplies are ideal battery chargers. Once the output is set at the correct voltage the battery will charge constantly without overcharging. This can be useful for emergency power systems.
- **Protective measures**

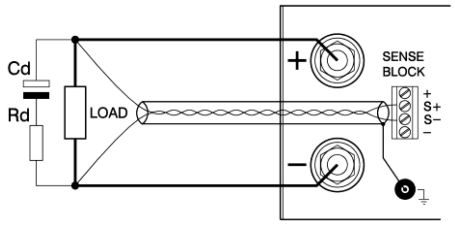


*fig 5 - 6*
*Remote sensing with shielded wires.*

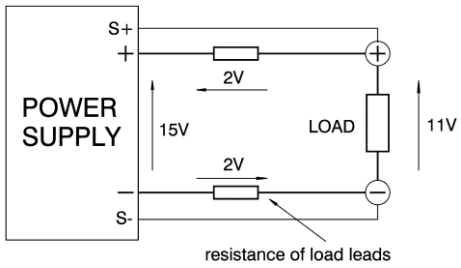


*fig 5 - 7*
*remote sensing, voltage drop on load leads subtracts from the maximum output.*

| Suggested circuit breakers for protection power supply | | | |
|---|---|---|---|
| **Model** | **Type nr.** | **Brand** | **Remarks** |
| SM15-100 | HTI101 B 100 | GE | - |
| SM35-45 | S281 UC-Z 50 | ABB | - |
| SM52-30 | S281 UC-Z 32 | ABB | extra parallel diode on output needed BYV255V-200 |
| SM52AR-60 | S281 UC-Z 63 | ABB | extra parallel diode on output needed BYV255V-200 |
| SM70-22 | S281 UC-Z 25 | ABB | - |
| SM120-13 | S281 UC-Z 16 | ABB | extra parallel diode on output needed BYV255V-200 |
| SM300-5 | S282 UC-Z 6 use with 2 poles in series | ABB | extra parallel diode on output needed 2x BYT261PIV400 |
| SM400AR-8 | S282 UC-Z 10 use with 2 poles in series | ABB | extra parallel diode on output needed 2x BYT261PIV1000 |

*table 5 -2*
*Circuit breakers for protection.*

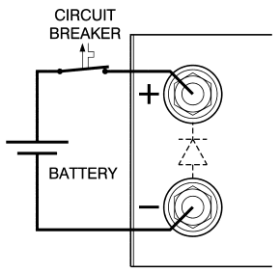


*fig 5 - 8*
*Charging a battery with a circuit breaker in series.*

Use a CIRCUIT BREAKER in series in order to protect the power supply from **accidental reverse connection** (see fig. 5 - 8). The circuit breaker should have a DC voltage rating twice the battery voltage. Use the very fast type (Z), a type meant for protecting semiconductors (see table 5 - 2).

- The unit has a reverse diode in parallel with the DC output, this diode and the wiring cannot withstand the thousands of amperes supplied by a wrongly connected battery.

## 5.14 REMOTE SHUTDOWN

- The Remote ShutDown can be operated on CON E by a voltage of +4 V...+12 V or by a relay contact between Vref and Remote ShutDown (pin 9 and 5) (see fig. 5 - 9).
- When the unit is programmed with an optional PSC, a software command can be used for Remote Shutdown.
- In the Remote ShutDown condition, the RSD LED will be on. The DCF LED, DCF status and the DCF relay will be off.

***Important:*** *If the link from the Interlock connector (CON A) has been removed, the RSD LED will be on, but in this condition also the DCF LED, the DCF status and the DCF relay will be on.*

## 5.15 MASTER / SLAVE SERIES OPERATION

- Connect output terminals and test system in **normal series** operation. Ensure that all DC power connections are reliable.
- The voltage drop in the connecting leads between the units should be kept < 10 mV.
- Switch off all units. Connect units as shown in fig. 5 - 10. To connect the slaves with the master via CON B and CON C, use standard UTP cables (RJ45).
  On all units put DIP switch 4 of SW1 in position *Right* to set the units in M/S series mode.
- After turning the units on again, the slaves will be in Remote CV mode and the Keylock (see previous paragraph is activated. This is because the unit automatically detects the presence of the RJ45 connector in CON C (if this cable is connected to another unit).

  *If the RJ45 connector is removed from CON C when the unit is turned on, the DC output will shutdown to avoid accidental damage.*
  *If the cable is inserted when the unit is turned on, the DC output shuts down, the unit changes to Remote CV / CC, the Keylock will be activated and the output will turn back on.*
  *If DIP switch 4 of SW1 is operated when the unit is turned on, the DC output will shutdown to avoid accidental damage.*
- The maximum number of slaves is only limited by the maximum total voltage of 600 V.

## 5.16 MASTER / SLAVE PARALLEL OPERATION

- **Note: Master / Slave parallel is not recommended for more than 3 units, consult factory for using more than 3 power supplies in parallel.**
- First connect the DC power terminals and test system in **normal parallel** operation. Ensure that all power connections are reliable.
- Second, switch off all units. To connect the slaves with the master via CON B and CON C, use standard RJ45 connectors according to fig. 5 - 11.
  On all units put DIP switch 4 of SW1 in position *Left* to set the units in M/S parallel mode. In this mode the DCF LED, DCF relay and DCF status on the slaves are disabled because the slaves are always in CC mode.
- After turning the units on again, the slaves will be in Remote CC mode and the Keylock (see previous paragraph 5) is activated. This is because the unit automatically detects the presence of the RJ45 connector in CON C (if this cable is connected to another unit).

  *If the RJ45 connector is removed from CON C when the unit is turned on, the output will shutdown to avoid accidental damage.*

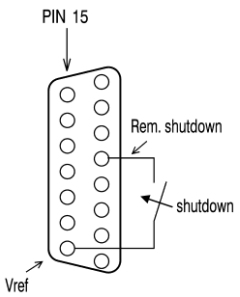


*fig 5 - 9*
*Remote Shutdown with switch.*

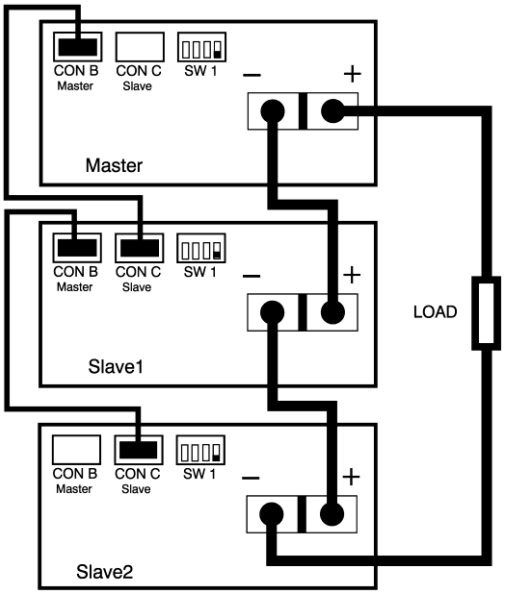


*fig 5 – 10*
*Master / Slave series connections.*

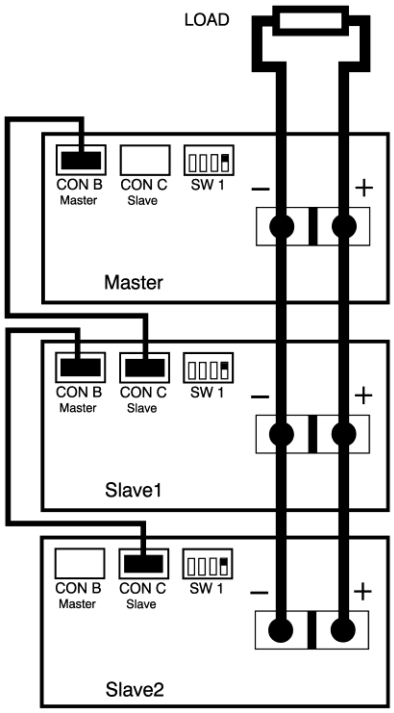


*fig 5 - 11*
*Master / Slave parallel connections.*

*If the cable is inserted when the unit is turned on, the output shuts down, the unit changes to Remote CV / CC, the Keylock will be activated and the output will turn back on.*

*If DIP switch 4 of SW1 is operated when the unit is turned on, the output will shutdown to avoid accidental damage.*

- Stack the units to create a minimum distance between the units. Keep the load close to the master.

  Use copper strips (preferred) or short thick cables to connect the units. Make sure the strips are mounted with a minimum length to keep the voltage drop between a unit and the bus bar below 10 mV. Also keep the strips close to each other to have a low inductance.

  Not following these instructions can cause instability.

- The S- and S+ could be connected to the load if desired, but this is not recommended because of the complexity and possible instability.

## 5.17 PARALLEL OPERATION OF HIGH SPEED PROGRAMMING VERSIONS:

- Master / Slave operation is not recommended.
- Normal parallel operation can give problems, each combination has to be tested first in combination with the load.

## 5.18 MASTER / SLAVE MIXED SERIES / PARALLEL OPERATION

- For complex combinations as mixed series - parallel, always use a MASTER / SLAVE SERIES ADAPTER.
- See fig. 5 - 12 for an example of how to connect 2 units in series in parallel with 2 units in series, controlled by 1 master.
- Set the programming mode with the knob Remote / Local on the front panel. The serial slaves must be in Remote CV- and CC-mode. The parallel slave must be in Remote CC-mode and the CV-potmeter must be fully opened.
- Note: A Master / Slave combination can always be programmed, also with the RS232 controller (PSC-232).

.

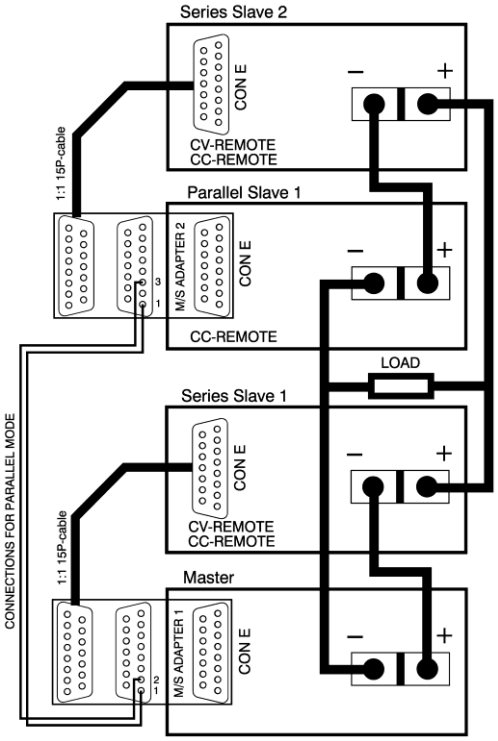


*fig 5 - 12*
*Master / Slave mixed series – parallel connections.*

# 6 TROUBLE SHOOTING

## 6.1 GENERAL

- If you have a question about the unit, please contact our engineers using the address Support@Delta-Elektronika.nl.
- In case the unit is defect, please first fill out the RMA-form before sending the unit to us. Adding a detailed fault description will help us to repair the unit as soon as possible. Do not try to repair the unit yourself.
- On our website the RMA-form can be found under 'Support'.

## 6.2 NO DC OUTPUT (manual control)

- Check the LED's 'Remote CV' and 'Remote CC' on the front panel, they should be off. Disable Keylock and press the REMOTE/LOCAL switch to turn both LED's off.
- The LED 'Output On' should be on. If this LED is off, disable Keylock and push the button 'OUTPUT ON/OFF'.
- Check the connections on the SENSE BLOCK (at rear panel), there should be a link between + and S+ and between – and S– (see fig. 6 - 3).
- Check if there is a link in the Interlock connector (if not, the RSD LED will be on).
- Set both the CV- and CC-limit potentiometer (at front panel) at maximum (fully clockwise).
- Turn both the CV and CC potentiometers a few turns clockwise.
- A voltage should be present on the output (for units with Option P220 first remove the Keylock function before the CV and CC knobs can be turned, see par.5 in previous chapter "operating manual").
- Turn both the CV and CC potentiometers a few turns clockwise. A voltage should be present on the output.

## 6.3 PROGRAMMING DOES NOT WORK OK

- Check the unit is in Remote mode (Remote CV and/or Remote CC LED should be on).
- The unit works OK in manual control, but in programming mode the output voltage / current has a large error.
- Probably the fuse in series with Ø (pin 1) of programming connector tripped, the fuse (F27_1 = 650 mA) is a self-resetting type (see fig. 6 - 1).
- To check the fuse (F27_1) measure the voltage between Ø and the minus output, during the fault condition. The voltage should only be a few mV, a high voltage means that an unwanted current is flowing through pin 1 of the prog. connector.
- Please check why current is flowing through pin 1, see also next paragraph and fig. 6 - 2.

## 6.4 PROGRAMMING OFFSETS

- **Unwanted offsets in the programming can be caused by earth loops.**
- Figure 5 - 2 shows a typical earthing problem. In case the load has a connection to earth and the programming source as well, problems could occur. Improper choice of the earthing point of the load can give a voltage drop of ΔV1. Connecting the minus or zero to a separate earth connection can give a voltage drop of ΔV2. Because the internal wires of the programming input are thin, the voltage drops ΔV1 and ΔV2 will be across the internal wiring as well. Resulting in an error voltage in series with the programming voltage.
- The best solution for this is to use a floating programming source, a floating load or the optional internal **ISO AMP CARD**.

## 6.5 STATUS OUTPUTS FAIL

- Check fuse F27_2 in series with Ø (pin 8 of CON E), see fig. 6 - 1. To check the fuse, measure the voltage between Ø and the minus output, a high voltage means too much current flowing through the fuse. F27_2 = 650 mA, self resetting.

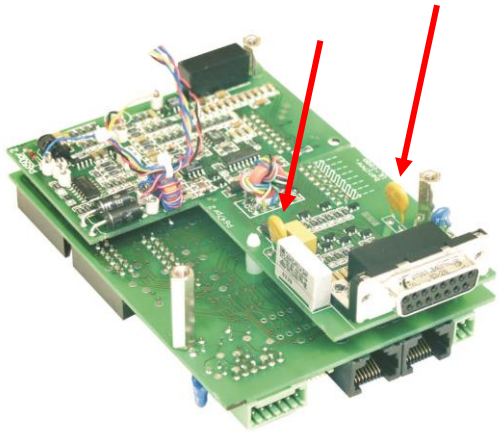

*fig 6 - 1*
*Location of programming fuses on P647.*
*P647 is situated directly behind the rear panel.*

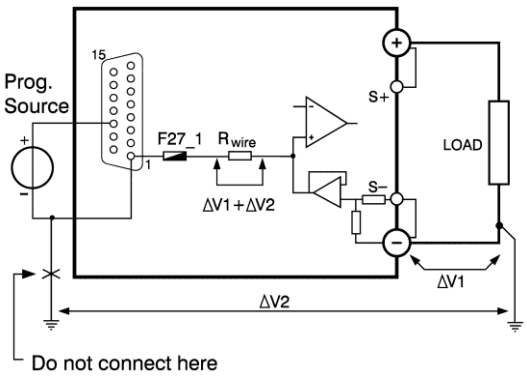


*fig 6 - 2*
*Unwanted programming offsets.*

## 6.6 MASTER / SLAVE PARALLEL PROBLEMS

- Check the voltage drop of the wiring between the master and the slaves is < 10 mV.
- Check the wiring has a low inductance.

## 6.7 DC OUTPUT VOLTAGE IS HIGHER THAN SET VALUE

- Check connections on SENSE BLOCK (on rear panel), For normal operation there should be a link between + and S+ and between – and S– (see also fig. 6 - 3). When remote sensing is used, check the wires of the sensing.

## 6.8 OT LED on

- The temperature of the internal heat sink is too high, the output has been shutdown to avoid overheating.
- Check if the cooling fans are running.
- Check if the air temperature of the air inlets (left) is below 50 °C and the airflow is not obstructed.

## 6.9 OT LED blinks

- The temperature of the internal heat sink is getting too high, a further increase will shutdown the power supply.
- Check if the cooling fan is running properly.
- Check if the air temperature of the air inlet (left) is below 50 °C and the airflow is not obstructed.

## 6.10 ACF LED on

- The input voltage is too low or was intermittent because of a bad connection. Disconnect the mains, wait a few minutes and try again.

  **Note the following:**
  *As soon as the ACF LED is on, the settings for Remote CV, Remote CC and Keylock will be saved. If the unit turns back on, it will have the same settings. For the setting of Output On/Off after turning the unit back on, the position of DIP switch 2 on SW1 is determining.*

  *If the ACF situation lasts a few seconds, the output will shutdown. The ACF problem has to be solved first, before the output can be turned on again.*

- Internal error, send unit for repair. See paragraph 1).

## 6.11 DCF LED on

- The output voltage is below the set voltage. This automatically happens when the unit is in CC-mode (CC LED is on).
- Also with an interrupted Interlock connector, the DCF LED will be on.
- Internal error, send unit for repair. See paragraph 1).

## 6.12 PSOL LED on

- The Power Sink is in overload, or the temperature of the Power Sink is too high. See datasheet of the Power Sink option for further details.

## 6.13 Blinking LEDs REMOTE CV, REMOTE CC and OUTPUT ON

- This indicates the Keylock function is activated, see previous paragraph 5) in "operating manual".

## 6.14 NO LEDS on

- Check input.
- Do not try to repair but send for repair. See paragraph 1).

## 6.15 Other

- If the problem persists, please fill out the RMA-form on our website **www.delta-elektronika.nl**. See previous paragraph 1).

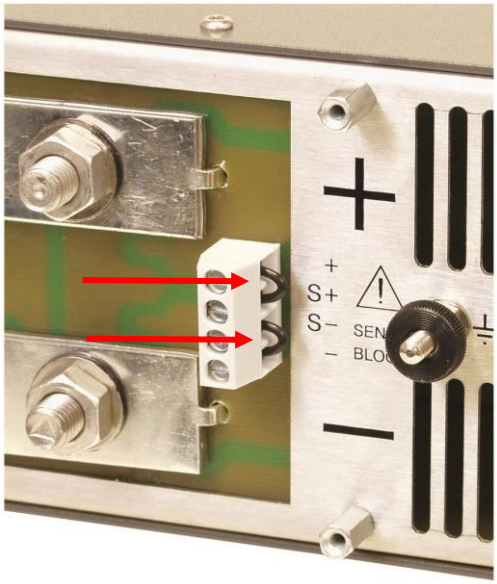


*fig 6 - 3*
*For normal operation links should be connected between S+ and +, and between S- and -.*

# 7 MAINTENANCE & CALIBRATION

## 7.1 GENERAL

- The SM-series power sup plies do not need any maintenance or calibration. However, care must be taken that the cooling of the unit is not obstructed.

## 7.2 COOLING FAN

- The built up of dust on the impeller of the fan and the heat sink fins depends on the environment. Since the fan has over-capacity, dust will not present a problem very quickly.
- The internal construction of the power supply is such that no dust will reach the sensitive control circuitry, only the heat sink in a tunnel will be cooled by forced air (see fig. 7 - 1).
- The thermal protection will shut down the out put in case of over heating, so the power supply will not be damaged.
- It is advisable to inspect the fan and the heat sink regularly.

## 7.3 GALVANIC INDUSTRY

- For using the power supplies in the galvanic industry, it is strongly recommended to take precautions against an aggressive environment.
- An aggressive environment with acid, salt, etc. can harm the electronic components. Sometimes even the copper tracks on the printed circuit boards dissolve.
- To avoid problems, the power supplies should be mounted in a relatively clean room or mounted in a cabinet receiving clean air with over pressure, or a cabinet with a heat exchanger.

## 7.4 CALIBRATION

- The power supplies are factory calibrated and normally need no further calibration.
- Only in special situations, for example after repairing a unit, calibration can be necessary.

## 7.5 METER CALIBRATION

- DIGITAL METERS
  The full-scale indication can be calibrated with R25_31 and R25_36 on P596 (see fig. 7 - 2).

## 7.6 SPECIAL CALIBRATIONS

- The following calibrations must be done by qualified personnel only. Wrong calibration causes malfunction. These calibrations are only needed after special repairs.
  **Warning!** Damage caused by a wrong calibration is not warranted.
- CALIBRATING THE CURRENT MONITOR OFFSET.
  With R26_73 on P650 the offset of the CC monitor voltage can be calibrated (see fig. 7 - 3). The unit has to be unloaded; the output voltage has to be turned off using the OUTPUT ON/OFF button. Measure the offset voltage of the CC monitor on the programming connector. Calibrate the offset on a negative value between –1 mV and zero mV.
  **Warning!** wrong calibration can damage the unit.
- CALIBRATING MAX. CURRENT RANGE or CALIBRATING CC MONITOR FULL SCALE.
  Short the output using a low resistive cable. Measure the output current with an accurate shunt. The maximum output current can be calibrated with R26_41. R26_41 is located on P650 (see fig. 7 - 3).

  Program CC input with exactly 5.00 V.
  Set output voltage to a high value, ensuring the power supply is in CC mode. Calibrate the current with R26_41 exactly on the rated max. current.
  **Warning!** Wrong calibration can damage the unit.

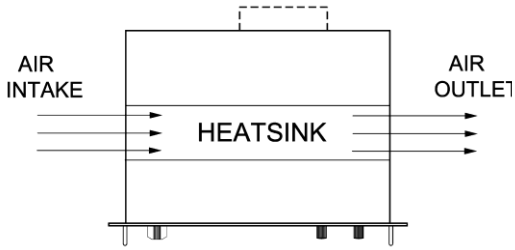


*fig 7 -1*
*The fan is located at the left side and blows through the tunnel.*

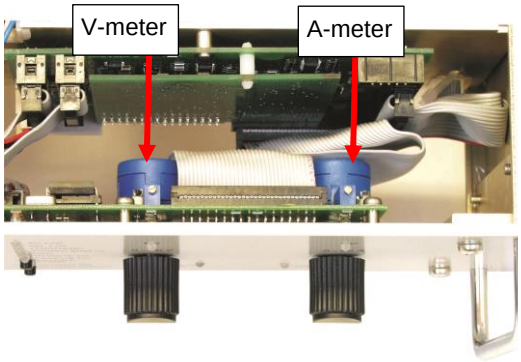


*fig 7 -2*
*Meter calibration with 25-turn potmeters on P596.*

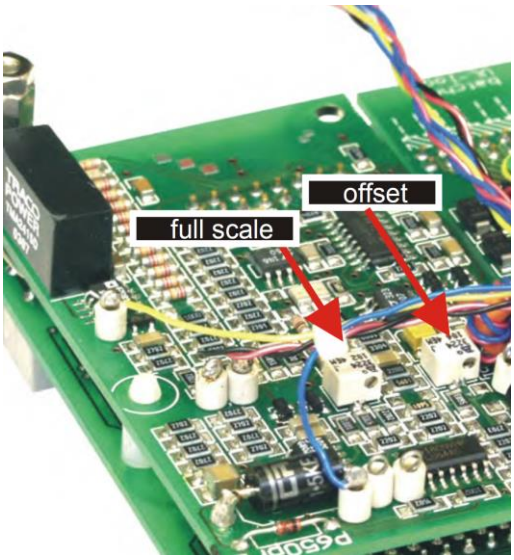


*fig 7 -3*
*Calibrating maximum current and offset on P650.*

**DELTA** ELEKTRONIKA B.V.
DC POWER SUPPLIES

Vissersdijk 4, 4301 ND
Zierikzee, the Netherlands

www.DeltaPowerSupplies.com
Tel. +31 111 413656

# 8 EU Declaration of Conformity – SM1500-series

We

Delta Elektronika
Vissersdijk 4
4301 ND ZIERIKZEE
The Netherlands

Declare under sole responsibility that the following Power Supplies:

**SM 15-100**
**SM 35-45**
**SM 52-30**
**SM 52-AR-60**
**SM 70-22**
**SM 120-13**
**SM 300-5**
**SM 400-AR-8**

Meet the intent of Directives

2014/30/EU Electromagnetic Compatibility (EMC)
2014/35/EU Low Voltage Directive (LVD)
2011/65/EU Reduction of Hazardous Substances (RoHS2)

Compliance was demonstrated to the following specification as listed in the official Journal of the European Union:

| | |
|---|---|
| **EN 61326-1:2013** | **EMC requirements for electrical equipment for measurement, control and laboratory use** |
| **EN 61010-1:2010/A1:2019/AC:2019-04** | **Safety requirements for electrical equipment for measurement, control and laboratory use** |
| **EN IEC 63000:2018** | **Assessment of electrical and electronic products with respect to RoHS** |

J. Koopman
Managing director,
Zierikzee, February 2025